FLUX FOOD
Certified conformity

FLUX
More than just pumps

FLUX FOOD

The pump series with the glass-fork symbol

FLUX FOOD pumps meet the latest European safety standards for food contact surfaces. They comply with Regulation (EC) No. 1935/2004 and the "Plastics" Regulation (EU) 10/2011 and are allowed to bear the glass-fork symbol.

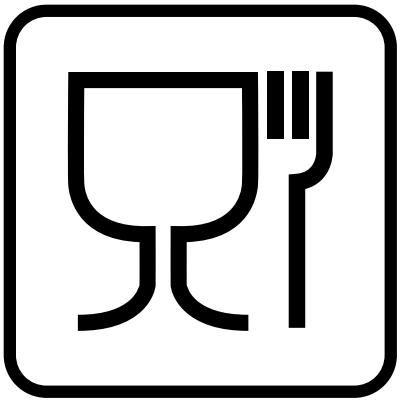

The FLUX FOOD pumps bear the well-known glass-fork symbol.

The FLUX FOOD series

The FLUX FOOD series includes the drum and container pumps FP 427 FOOD and FP 430 FOOD and the eccentric worm-drive pump F 560 FOOD. All FOOD pumps are in stainless steel. They cover a wide range of applications from low to high viscosity fluid transfer and are easy to dismantle and clean. Moreover, the FP 430 FOOD drum pump features explosion protection for the transfer of alcohols.

FLUX FOOD – For applications in the food industry.

What does the glass-fork symbol stand for?

The Regulation (EU) 10/2011 for plastics that come into contact with food, a specific measure of the Regulation (EC) 1935/2004, has come into force in May 2011. For the first time, it provides the members of the European Union with a uniform definition of the requirements for plastic materials and objects that are designed to come into contact with food. Moreover, it defines the testing methods for certification. Only appropriately certified products may bear the glass-fork symbol.

Different risk assessments in EU and the US (FDA)

There are differences in terms of the risk assessment of the approved substances in the EU compared to the requirements made by the American Food and Drug Administration (FDA). The new pumps of the FLUX FOOD series comply with both the EU Regulation 10/2011 and the FDA requirements which means major advantages especially for globally active companies.

Advantages

- **Certified for contact with food in accordance with the latest EU Regulations**
- **Also certified in accordance with the FDA requirements (for the US market)**
- **Explosion-proof drum pump also available**
- **Easy to dismantle and clean**

3A pumps for the US market

In contrast to the EU Regulation and the FDA requirements, the certification in accordance with the 3A Sanitary Standards required for the USA also focuses on special requirements in terms of the pump design. Already since 1995, FLUX has been offering pumps of the F 427 and F 560 series which both meet the FDA requirements and are 3A-certified.

FLUX FOOD

FP 427 FOOD drum pump – Can be taken apart completely

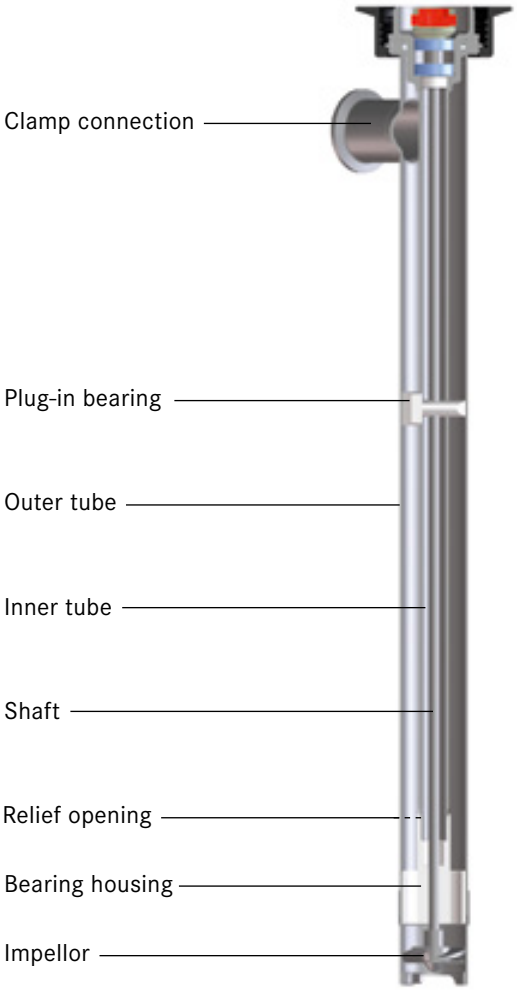

Product characteristics

- Without mechanical seal, therefore completely dismountable
- Quick dismantling without tools
- Minimised dead spot areas
- Can be used even for fluids that contain solids
- Pulsation-free delivery
- Delivery against closed valve possible (e.g. flap valve)
- Low weight
- Can be combined with various motors as required
- Also available with variable motor speed adjustment

Technical data

- Max. delivery rate: 240 litres per minute
- Max. viscosity: 1 000 mPas
- Immersion lengths: 700/1 000/1 200 mm
- Material: Main material stainless steel, all parts in contact with the medium are certified
- Pump discharge connection: Clamp 1½“

Function description

The completely dismountable FP 427 FOOD is a drum pump without mechanical seal that works based on the principle of an axial-flow propeller pump. Its pump unit consists of drive motor and pump. Via a clutch, the motor drives the drive shaft which has a propeller-like impellor attached to its end. Delivery by the pump requires that the impellor is completely covered with the fluid. The fluid is transferred axially due to the rotation, i.e. towards the pump discharge along the pump shaft.

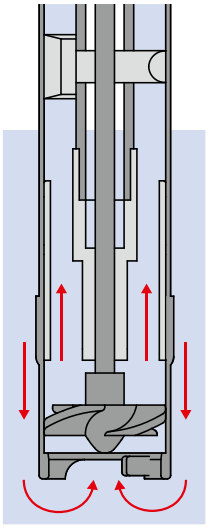

In the sealless FP 427 FOOD, the fluid is transferred along the shaft and also gets into the inner tube where it has the same level as in the drum. When the drum is emptied, the fluid level in the drum is lowered. Accordingly, the fluid level in the inner tube is also lowered and the fluid inside is discharged through the relief openings.

Advantages

- **Can be dismantled completely**
- **One pump for various fluids**
- **Several pumps may be driven by one motor**
- **Insensitive to solids in the fluid**
- **Easy to dismantle**
- **Fluids can be changed quickly**
- **Short changeover times**
- **Can be carried by one person**
- **Use with valves possible (e.g. flap valves)**

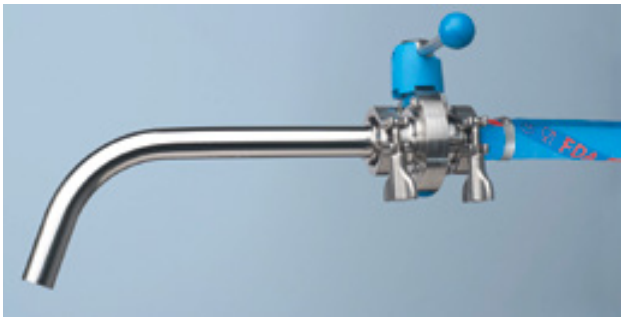

For use with the FP 427 FOOD:
the discharge fitting with flap valve.

FLUX FOOD

FP 430 FOOD drum pump – Explosion-proved

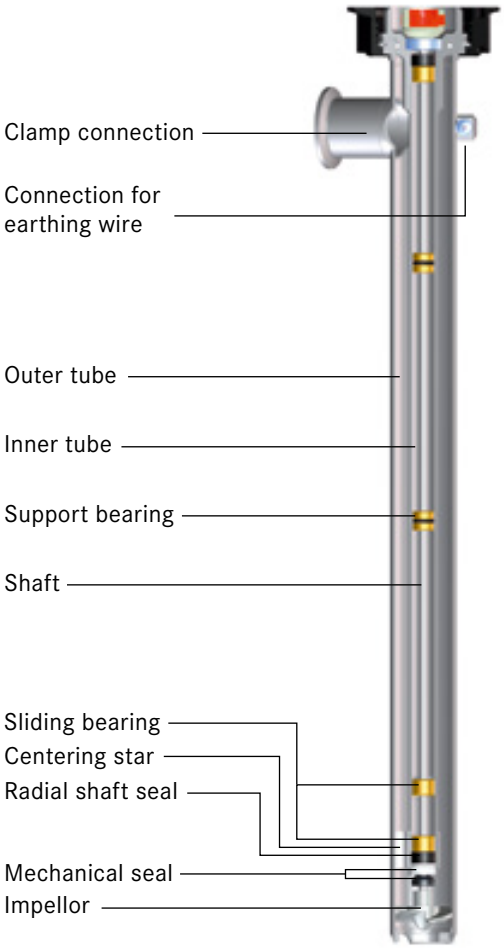

Function description

The FP 430 FOOD is a drum pump with mechanical seal that works based on the principle of an axial-flow propeller pump. Its pump unit consists of drive motor and pump. Via a clutch, the motor drives the drive shaft which has a propeller-like impellor attached to its end. Delivery by the pump requires that the impellor is completely covered with the fluid. The fluid is transferred axially due to the rotation, i.e. towards the pump discharge along the pump shaft.

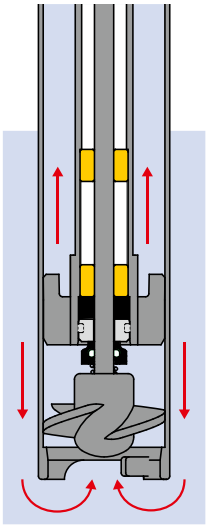

In the FP 430 FOOD, the mechanical seal seals the inner tube towards the fluid. In this way, the seal prevents the fluid from getting into the inner tube. The shaft is in contact with the fluid only in the area of the impellor.

Product characteristics

- With mechanical seal
- Can be taken apart in two parts (inner tube with shaft, mechanical seal and impellor and outer tube)
- For volatile fluids
- Pulsation-free delivery
- Delivery against closed valve possible (e.g. pump nozzle)
- Low weight
- Can be combined with various motors as required
- Also available with variable motor speed adjustment

Advantages

- **Explosion-proof for transfer of alcohols**
- **One pump for various fluids**
- **Several pumps may be driven by one motor**
- **Insensitive to solids in the fluid**
- **Easy to dismantle (except for mechanical seal)**
- **Fluids can be changed quickly**
- **Short changeover times**
- **Can be carried by one person**
- **Use with valves possible (e.g. flap valves)**

Technical data

- Max. delivery rate: 240 litres per minute
- Max. viscosity: 1 000 mPas
- Immersion lengths: 700/1 000/1 200 mm
- Material: Main material stainless steel, all parts in contact with the fluid are certified
- Pump discharge connection: Clamp 1½“

Hand nozzle for use with FP 430 FOOD.

FLUX FOOD

F 560 FOOD eccentric worm-drive pump – For higher viscosity food

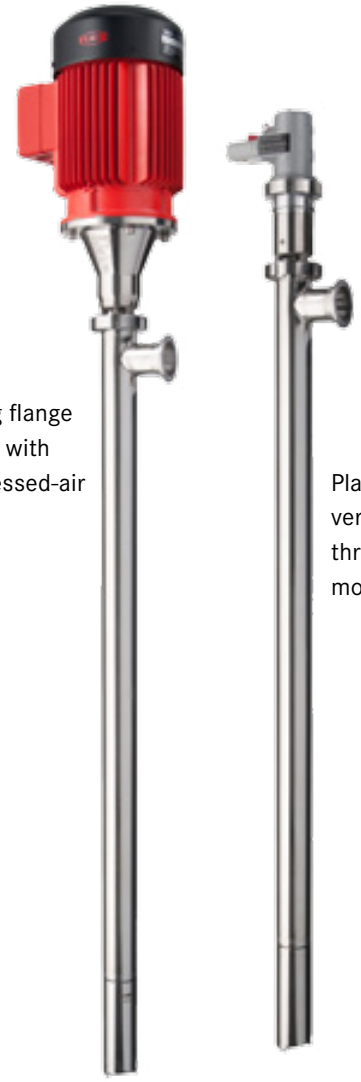

Bearing flange version with compressed-air motor

Planetary gear version with three-phase motor

Function description

The F 560 FOOD eccentric worm-drive pump is a self-priming pump for fluids of higher viscosities. Bearing flange and planetary gear versions are available.

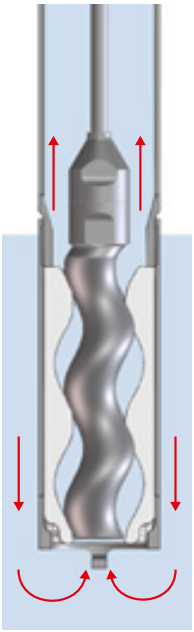

The pump works on the displacement principle. Its worm-shaped impellor (eccentric worm) is guided in a stator shaped as a mating counterpart. This creates closed cavities during rotation in which the fluid is transferred upward continuously in an especially gentle manner and almost without pulsation.

The intake side is automatically sealed by the eccentric worm. This allows a high pressure to be built up independent of the motor speed.

Product characteristics

- Self-priming positive displacement pump
- Low-turbulence and gentle transport
- Low-pulsation flow
- Minimised dead spot areas
- Comprehensive modular construction system
- Also available with variable motor speed adjustment (delivery rate proportional to motor speed)
- Pump/shaft/worm can be easily dismantled without tools

Technical data

- Max. delivery rate: 50 litres per minute
- Immersion lengths: 700/1 000/1 200 mm
- Nominal pressure: 8 bar
- Material: Main material stainless steel, all parts in contact with the medium are certified
- Pump discharge connection: Clamp 2“

Advantages

- **Optimal for viscous flowable fluids**
- **Also suitable for fluids sensitive to shearing**
- **Constant delivery pressure**
- **Can be adjusted individually to the fluid properties**
- **Delivery rate can be regulated (in combination with frequency-controlled three-phase motor)**
- **Delivery rate can easily be calculated**
- **Pump is easy to dismantle**

For use with the F 560 FOOD: the discharge spout with clamp.

More than just pumps

Today the FLUX name is recognised around the globe as the trademark for top standards in pump technology. Everything started with the invention of the electric drum pump in 1950. Nowadays FLUX has an extensive range of products each of which can be customized. FLUX pumps are used for example in the chemical and pharmaceutical industries; in machinery and plant engineering as well as companies in electroplating, effluent treatment and the foodstuffs sector.

Whether single-product or system solution – FLUX quality is synonymous with a long service life, excellent economy and maximum safety.

In addition to the excellent product quality FLUX customers appreciate the superb level of expertise our staff has to offer as well as their genuine customer focus.

These days FLUX-GERÄTE GMBH supplies pumps to almost 100 countries around the globe.

FLUX FOOD 1116/2-E printed in Germany

FLUX-GERÄTE GMBH
Talweg 12 · D-75433 Maulbronn
Tel +49 (0)7043 101-0 · Fax +49 (0)7043 101-444
info@flux-pumpen.de · www.flux-pumps.com